MODEL	MATERIAL	OVERALL SIZE	INSTALLATION	FINISHES	HARDWARE
E5	Galvanized Steel	8.5” W 12” H 4” D	Wall mounted	Power coat paint: Satin black, Oiled rubbed metallic bronze.	Screws and anchors included.

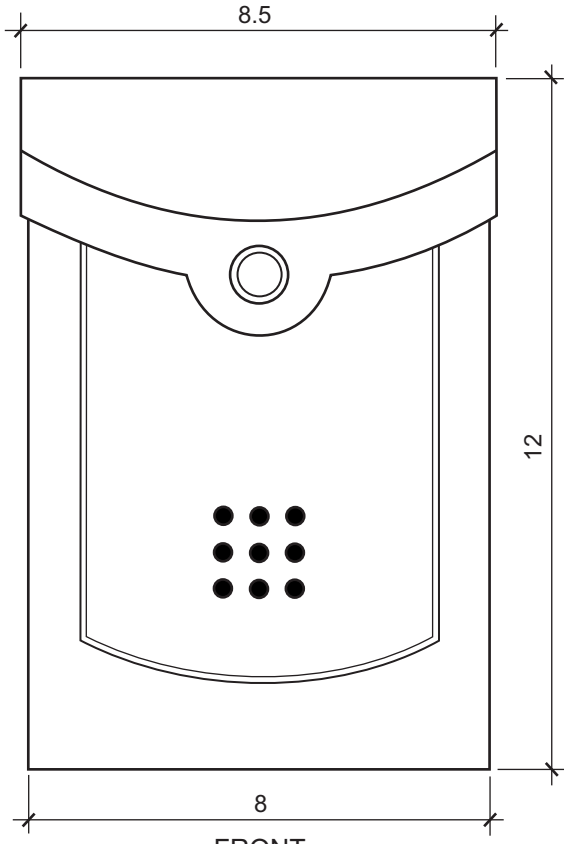

FRONT

IMAGES NOT TO SCALE

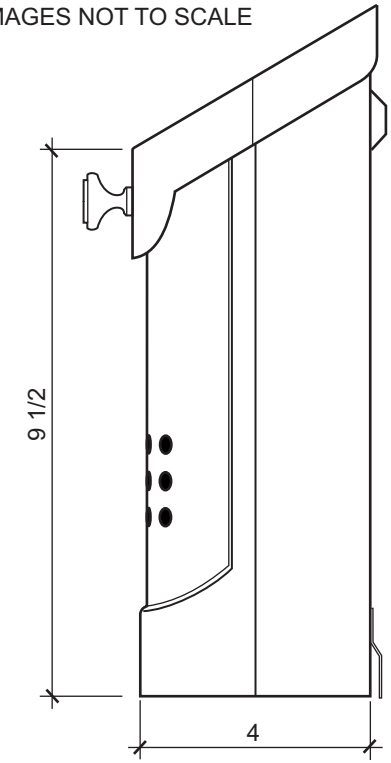

SIDE

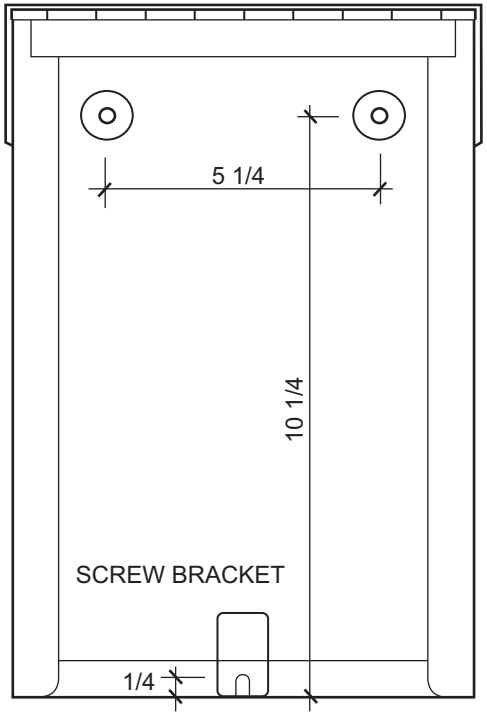

BACK

Maintenance

The E5 mailbox is made of galvanized steel and painted in a durable powder coat finish.

Clean using mild soap and water. To prolong the life of the paint, apply a coat of car wax after cleaning several times a year.

Installation Instructions

1 Remove the knob from the back panel and install it on lid. The knob is located in one of the screw holes inside the mailbox with the mounting screws.

2 Determine the location and height of where the mailbox is to be installed. Mark and install the LOWER SCREW FIRST, do not tighten all the way. Use plastic anchors when necessary.

3 Provide TEMPORARY PROTECTION in the area where the opened lid can touch the wall during installation to prevent scratching. Mount the mailbox onto the lower screw and mark location of upper holes. Install upper screws and tighten all three screws.

FUORISERIE 351 37TH STREET BROOKLYN NY 11232 T: 718 643 1381 E: FUORISERIE@AOL.COM